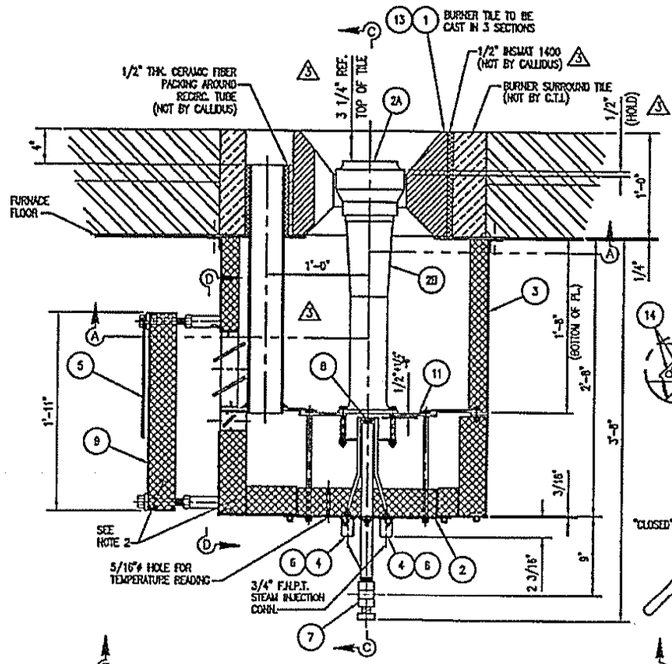

ELEVATION (SECTIONAL)

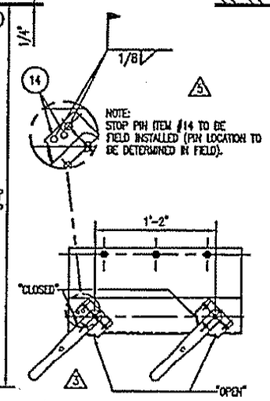

DAMPER HANDLE ORIENTATION

AIR CONTROL DAMPER HANDLES (SHOWN IN HALF OPEN POSITION)

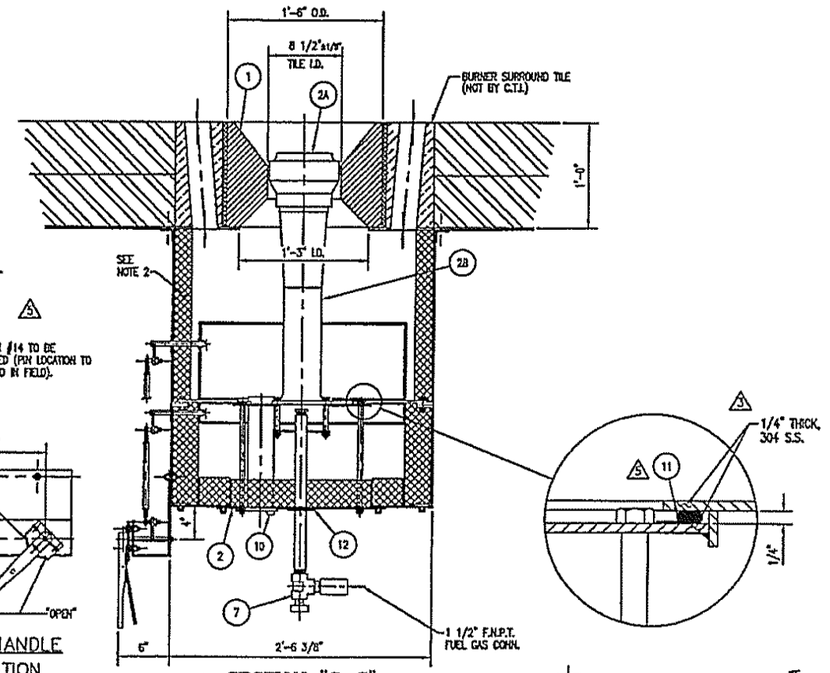

SECTION "C-C"

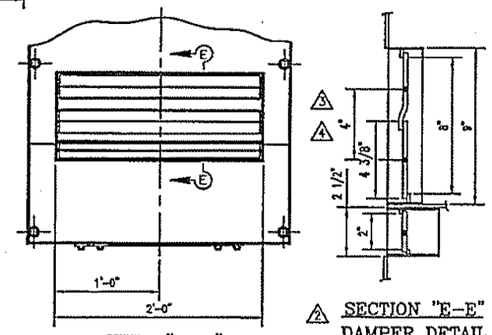

VIEW "D-D"

SECTION "E-E" DAMPER DETAIL

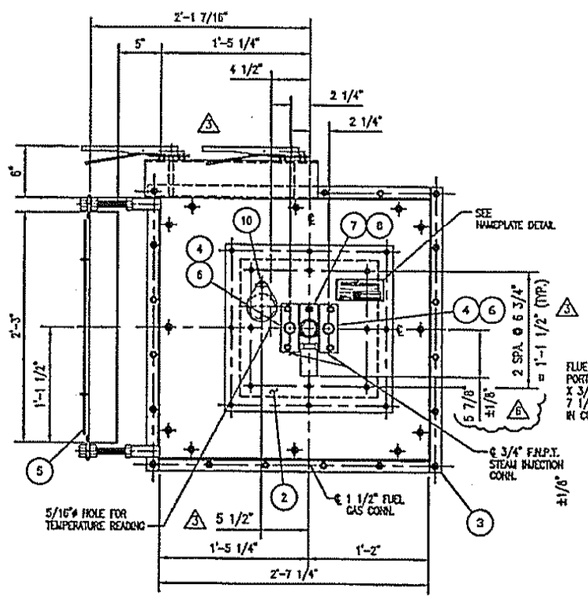

VIEW "B-B"
(TRUE ORIENTATION)

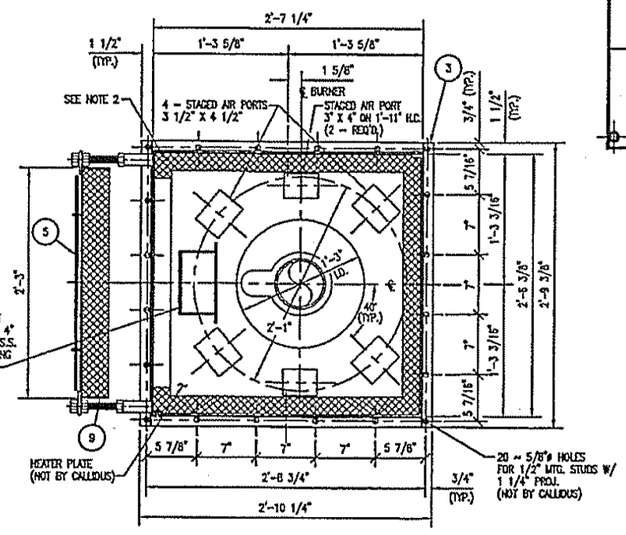

SECTION "A-A"

PARTS LIST (PER BURNER)

ITEM	QT'Y	DESCRIPTION	MAT'L	PART NO.
1	1	BURNER TILE SET (3 PC'S./SET)	✳	401
2	1	CENTER GUN ASSEMBLY	C.S.	402
2A	1	CENTER GUN TIP	HP-45NB	---
2B	1	CENTER GUN VENTURI	CF-8H	---
3	1	WINDBOX ASSEMBLY	C.S.	403
4	2	STEAM INJECTION ASSEMBLY	304 SS	411
5	1	SEAL PLATE (DAMPER) 16 GA.	304 SS	413
6	2	STEAM INJECTOR GASKET	C-4401	STD-1175
7	1	SPUD HOLDER ASSEMBLY	S.S.	414
8	1	GAS SPUD	304 SS	415
9	1	MUFFLER ASSEMBLY	C.S.	416
10	1	LIGHTING & SIGHTING PORT COVER	C.S.	STD-1064-B
5 11	4'-11"	DIVIDER PLATE GASKET-TADPOLE (1/2"ø x 1"WIDE)	TETRAGLAS	---
12	1	SPUD HOLDER ASSEMBLY GASKET	C-4401	423
13	3#	MORTAR (3000°F)	SAIRSET	---
5 2 14	✳✳	BAR: 3/8"ø x 1 3/16" LG.	C.S.	301-1

✳ = NOTED MAT'L. TO BE 60% ALUMINA, (3000°F AP GREEN EXPRESS 30) PREFIRED TO 500°F.

5 ✳✳ = 150 REQ'D PER JOB/ SHIP LOOSE.

BURNER DESIGN DATA

MAX. HEAT RELEASE = 5.61 MM BTU/HR
NORMAL HEAT RELEASE = 4.20 MM BTU/HR
MINIMUM HEAT RELEASE = 2.50 MM BTU/HR
EXCESS COMBUSTION AIR = 10%

REFINERY GAS DATA

L.H.V. = 614 - 668 BTU/SCF
S.G. = 0.34 - 0.37
M.W. = 9.73 - 10.84
TEMP. = 80°F

TAG NO'S.

TAG BURNER ASS'Y: 301
TAG BURNER TILE SET: 401
TAG MUFFLER ASS'Y.: 416
5 TAG 3/8"ø BAR: 301-1
TAG SPARE BURNER ASS'Y: SP-301 (3-REQ'D)
TAG SPARE TILE ASS'Y: SP-401 (15-REQ'D)
THE ABOVE TAG NO'S. TO BE PRECEDED BY CALLIDUS W.O.# B-5820

NOTES:

1) ALL FLANGE BOLTING TO STRADDLE CENTERLINES INDICATED BY ℄ (UNLESS OTHERWISE NOTED).
2) INSULATION TO BE 2" THK. MINERAL WOOL #6 ON UPPER WINDBOX & 3" THK. CERAMIC FIBER GOOD TO 1800°F MIN. ON LOWER WINDBOX & FRONT PLATE HELD IN PLACE WITH S.S. PINS & KEEPERS ON APPROX. 9" CTR'S. & 304 S.S. WIRE MESH (UNLESS OTHERWISE NOTED).
3) WINDBOX PLATE TO BE 3/16" (C.S.) (UNLESS OTHERWISE NOTED).
4) ALL DIMENSIONS TO BE ±1/8" (UNLESS OTHERWISE NOTED).
5) ALL NUTS & BOLTS TO BE ZINC PLATED.
6) ALL EXTERNAL C.S. SURFACES TO BE CLEANED PER SSPC-SP-10 & PAINT PORTER GRAY 3011F EPOXY EPA 780 (5 MILS D.F.T.) PRIMARY COAT; PORTER OFF WHITE EPOXY EPA 780 (5 MILS D.F.T.) INTERMEDIATE COAT & PORTER 5 CLAY TAN 5049P GLASS EPOXY MCR-43 (3 MILS D.F.T.) FINISH COAT.
7) APPROX. BURNER WEIGHT INCLUDING TILE = 700#
8) FOR OPERATING PRESSURES SEE CALLIDUS CAPACITY CURVE NO. AB-5820-181.
9) ORIFICE SPUD THREADS TO BE COATED WITH "FEL-PRO" COPPER BASED ANTI-SEIZE LUBRICANT, ALL OTHER GAS PIPING THREADS TO BE COATED W/ LOCTITE PST-567 SEALANT.
10) ALL BOLTED CONNECTIONS TO HAVE NON ASBESTOS GASKETS.
11) GAS SPUD IS REMOVABLE WITHOUT REMOVING BURNER BOTTOM PLATE.
12) BURNER IS REMOVABLE WITH FURNACE ON LINE. BOTTOM ACCESS PLATE & SPUD ASS'Y. TO BE PULLED AS ONE ASS'Y. BURNER TIP, VENTURI AND BOTTOM PLATE SHALL BE REMOVED AS ONE ASS'Y. 2
13) BURNER VENTURI MUST BE PLUMB & TIP MUST BE LEVEL IN THE INSTALLED POSITION.
14) ALL AUSTENITIC SS PARTS TO BE CHECKED FOR FERROMAGNETISM.
15) 100% OF TIPS TO BE CHECKED FOR THE CHROMIUM & NICKEL CONTENT.
16) DAMPER SHAFTS TO BE STN. ST'L. DAMPER BEARINGS TO BE BRONZE SLEEVE.

ORIGINAL

CALLIDUS TECHNOLOGIES INC. — The Instrumental & Combustion Experts — TULSA OKLAHOMA

WORK ORDER: B-5820
TAG. NO.: H95113
301 [redacted] SPC'L LOW NOX BRN'R

NAMEPLATE DETAIL

THE INFORMATION ON THIS DRAWING IS THE PROPERTY OF CALLIDUS TECHNOLOGIES INC., UNAUTHORIZED USE IS FORBIDDEN.

DRAWING STATUS: ☐ PRELIMINARY ☐ FOR APPROVAL ☐ FINAL — DATED:

DWG. NO.	REFERENCE DRAWING	NO.	REVISION	DR.	CKD.	APPR.
		6	REV'D. PER ECN# 015	PB 7/9/96		
		5	REV'D. PER ECN# 013	GAF 5/21/96	5/30/96	5/30/96
		4	REV'D. PER ECN# 010	2/5/96	PB 2/5/96	2/5/96
		3	REV'D. PER ECN# 007	11/21/95	PB 11-25-95	11-29-95
DB-5820-302	EXXON SPC'L LOW NOX BRN'R ASS'Y	2	REV'D. PER CUSTOMER APPROVAL & ECN# 002	10/3/95	PB	10/12/95
AB-5820-181	CAPACITY CURVE	1	REV'D. PER CUSTOMER COMMENTS	9/21/95	PS	RW

CALLIDUS TECHNOLOGIES INC. — The Instrumental & Combustion Experts — TULSA OKLAHOMA

CUSTOMER	BIRWELCO LTD.
P.O.	H95113/P115
USER	[redacted]
JOB SITE	BAYTOWN, TX.
DR. PB — DATE: 8/29/95	CK. P.BOWDER — DATE: 9/5/95
APPR. R.W. — DATE: 9-11-95	

[redacted] LOW NOX BURNER ASS'Y.
(144 - REQ'D.)
(3 SPARES REQ'D)

COMMENTS: RW
SCALE: NONE
DWG. NO.: DB-5820-301
REV.: 6

XAF-01 972-120-512