LEGEND

EQUIPMENT/ACCESSORIES	MK	TAG	QTY	DESCRIPTION	MFG.	MOD.
	A	P-2000,	2	CHARGE PUMP: 3" 150# FF SUCTION, 1 1/2" 150# FF DISCHARGE	FLOW./DURCO	1K3x1.5-82RV
		P-2100	2	MOTOR: 15 HP, 3600 RPM, CLASS I DIV. II GRP. D, 230-460/3/60	TECO OR =	254T FRAME
	B	F-2000,	2	FILTER: BAG FILTER VESSEL, TYPE 4, 4" 150# RF, (4) #2 SIZE BAGS	FSI	FSPN-800
		F-2100				
	C	P-2200,	2	INJ. PUMP: 6" 150# RF SS SUCTION, 3" 900# RF SS DISCHARGE	REDA HPS	S175N 54-STAGE
		P-2300	2	MOTOR: 250 HP, CLASS I DIV. II, 460/3/60	SIEMENS	TBD FRAME
	D	P-2400	1	SUMP PUMP: 1" DISCHARGE, W/ GEMS FLOAT SWITCH	STANCOR	P-20 CE
	E		2	HEATER: 10kW, 480V, XP, FORCED AIR	RUFFNECK	-
	F	B-2000 thru B-2200	3	EXHAUST FAN: 12" FAN, w/ 1/4 HP, 1725 RPM, 115/1/60 XP MOTOR	DAYTON	3XK51
	G		1	STRUCTURAL STEEL SKID:	PSI	
	H		1	STRUCTURAL STEEL BUILDING: 16' x 72' W/ GABLE STYLE ROOF	PSI	

REVISED	
PREPARED BY:	ZR
DATE:	02/10/12
REVISION #	3
APPROVED BY:	CC
SWO #	SEE STAMP

SWO # LOG	
SWO#1	1085658
SWO#2	1085659
SWO#3	1085660
SWO#4	
SWO#5	

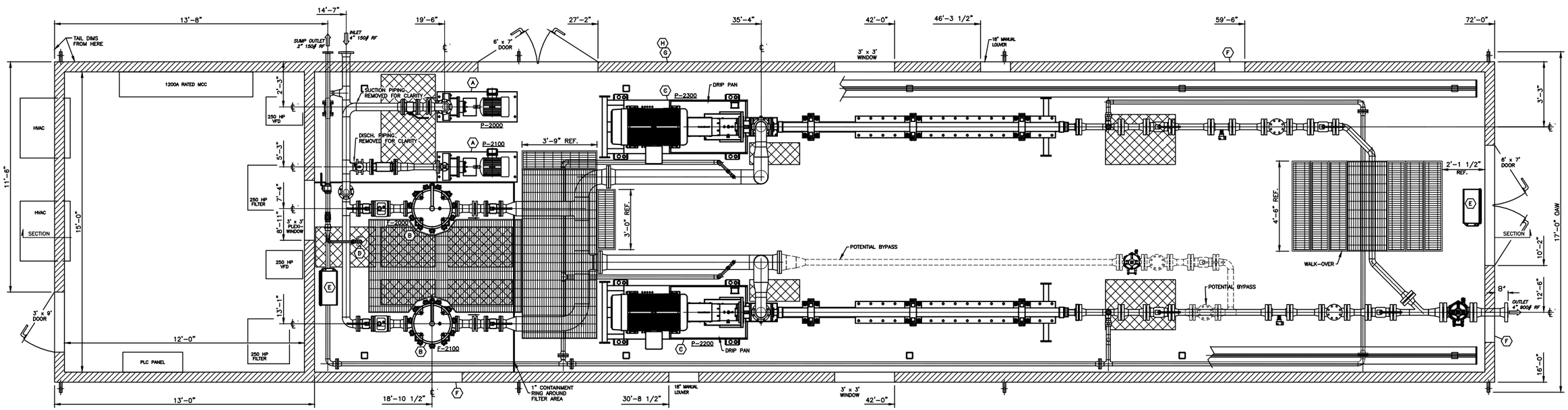

PLAN

NOTES:

1. TOTAL PACKAGE WEIGHT APPROX. 120,000 LBS.
2. VALVES TO BE CS/UCT COATED UNLESS PROVIDED ALLOY 20.
3. PIPE TO RECEIVE DUPONT #70008 INTERNAL COATING.
4. BUILDING EXTERIOR & INTERIOR COLOR TO BE WHITE.
5. BUILDING INSULATION TO BE: R-13 IN WALLS, R-13 IN ROOF AND R-13 EQUIVALENT SPRAY FOAM UNDER SKID.

NOTICE: This drawing has not been published but rather has been prepared for "HESS CORPARATION" by Power Service solely in respect of the construction, operation, and maintenance of the facility named in the title block and shall not be used for any other purpose or furnished to any other party, without the express written consent of Power Service, Inc.

NO.	DATE	BY	DESCRIPTION	CHK'D	APPR.
3	02/10/12	ZR	CORRECTIONS PER REVIEW	CC	-
2	08/09/11	ZR	EDITS PER REVIEW	CC	-
1	07/27/11	ZR	SHOW EXHAUST FANS AND VENTS	CC	-
0	07/13/11	CR	FOR CONSTRUCTION	ZR	CC
1A	07/08/11	ZR	UPDATED TO ACCOMMODATE CUST CHANGES	CC	-
A	05/24/11	ZR	FOR APPROVAL	CC	-

REVISIONS

DWG NO.	TITLE
HSCP-INJ-PID-1	GENERAL ARRANGEMENT LAYOUT

REFERENCE DRAWINGS

POWER SERVICE, INC.
CASPER, WYOMING, USA
(307)472-7722

DWN BY	CHK'D BY	APP'D BY	ENGINEER	DATE DWN.	SCALE:
ZR	CC	-	-	05/24/11	N.T.S.

THIS DRAWING ID THE PROPERTY OF POWER SERVICE, INC. CASPER, WYOMING, USA.

EQUIPMENT GENERAL ARRANGEMENT
WATER DISPOSAL PACKAGE
COS: 6000 BPD @ 1,200 PSIG
17'-0" OAW x 72'-0" OAL x 14'-6" OAH

SHEET:	PROJECT NO.	DWG. NO.	REV.
1 OF 2	SEE-STAMP	D-HSCP-INJ-LO-1	3

LEGEND

MK	TAG	QTY	DESCRIPTION	MFG.	MOD.
A	P-2000,	2	CHARGE PUMP: 3" 150# FF SUCTION, 1 1/2" 150# FF DISCHARGE	FLOW./DURCO	1K3x1.5-82RV
	P-2100	2	MOTOR: 15 HP, 3600 RPM, CLASS I DIV. II GRP. D, 230-460/3/60	TECO OR =	254T FRAME
B	F-2000,	2	FILTER: BAG FILTER VESSEL, TYPE 4, 4" 150# RF, (4) #2 SIZE BAGS	FSI	FSPN-800
	F-2100				
C	P-2200,	2	INJ. PUMP: 6" 150# RF SS SUCTION, 3" 900# RF SS DISCHARGE	REDA HPS	S175N 54-STAGE
	P-2300	2	MOTOR: 250 HP, CLASS I DIV. II, 460/3/60	SIEMENS	TBD FRAME
D	P-2400	1	SUMP PUMP: 1" DISCHARGE, W/ GEMS FLOAT SWITCH	STANCOR	P-20 CE
E		2	HEATER: 10kW, 480V, XP, FORCED AIR	RUFFNECK	-
F	B-2000 thru B-2200	3	EXHAUST FAN: 12" FAN, w/ 1/4 HP, 1725 RPM, 115/1/60 XP MOTOR	DAYTON	3XK51
G		1	STRUCTURAL STEEL SKID:	PSI	
H		1	STRUCTURAL STEEL BUILDING: 16' x 72' W/ GABLE STYLE ROOF	PSI	

EQUIPMENT/ACCESSORIES

REVISED	
PREPARED BY:	ZR
DATE:	02/10/12
REVISION #	3
APPROVED BY:	CC
SWO #	SEE STAMP

SWO # LOG	
SWO#1	1085658
SWO#2	1085659
SWO#3	1085660
SWO#4	
SWO#5	

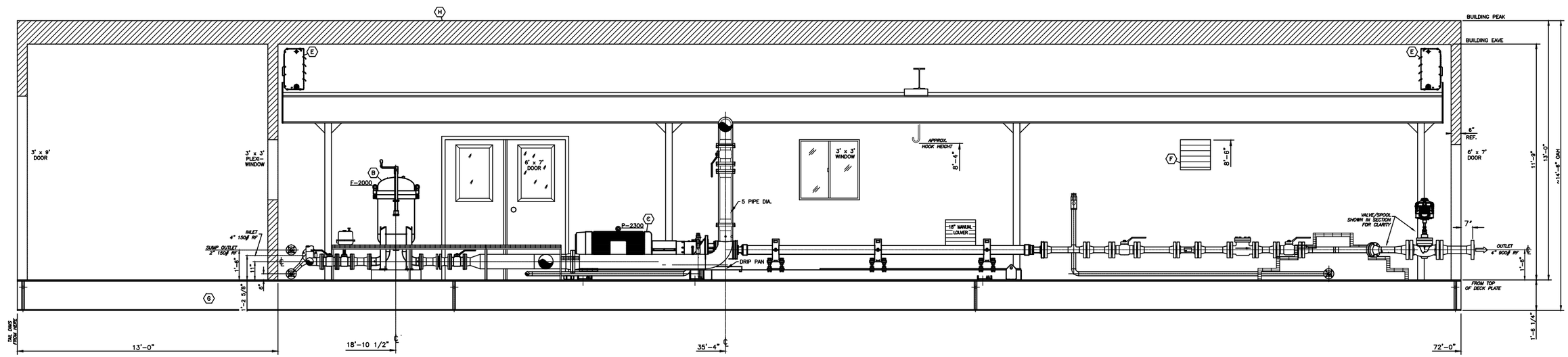

SECTION

NOTES:

1. TOTAL PACKAGE WEIGHT APPROX. 120,000 LBS.
2. VALVES TO BE CS/UCT COATED UNLESS PROVIDED ALLOY 20.
3. PIPE TO RECEIVE DUPONT #70008 INTERNAL COATING.
4. BUILDING EXTERIOR & INTERIOR COLOR TO BE WHITE.
5. BUILDING INSULATION TO BE: R-13 IN WALLS, R-13 IN ROOF AND R-13 EQUIVALENT SPRAY FOAM UNDER SKID.

NOTICE: This drawing has not been published but rather has been prepared for "HESS CORPARATION" by Power Service solely in respect of the construction, operation, and maintenance of the facility named in the title block and shall not be used for any other purpose or furnished to any other party, without the express written consent of Power Service, Inc.

NO.	DATE	BY	DESCRIPTION	CHK'D	APPR.
3	02/10/12	ZR	CORRECTIONS PER REVIEW	CC	-
2	08/09/11	ZR	EDITS PER REVIEW	CC	-
1	07/27/11	ZR	SHOW EXHAUST FANS AND VENTS	CC	-
0	07/13/11	CR	FOR CONSTUCTION	ZR	CC
1A	07/08/11	ZR	UPDATED TO ACCOMMODATE CUST CHANGES	CC	-
A	05/24/11	ZR	FOR APPROVAL	CC	-

REVISIONS

DWG NO.	TITLE
HSCP-INJ-PID-1	GENERAL ARRANGEMENT LAYOUT

REFERENCE DRAWINGS

POWER SERVICE, INC.
CASPER, WYOMING, USA
(307)472-7722

THIS DRAWING ID THE PROPERTY OF POWER SERVICE, INC. CASPER, WYOMING, USA.

EQUIPMENT GENERAL ARRANGEMENT
WATER DISPOSAL PACKAGE
COS: 6000 BPD @ 1,200 PSIG
17'-0" OAW x 72'-0" OAL x 14'-6" OAH

DWN BY	CHK'D BY	APP'D BY	ENGINEER	DATE DWN.	SCALE:
ZR	CC	-	-	05/24/11	N.T.S.

SHEET:	PROJECT NO.	DWG. NO.	REV.
2 OF 2	SEE-STAMP	D-HSCP-INJ-LO-1	3