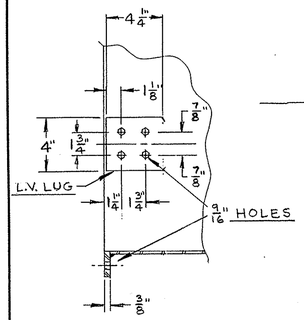

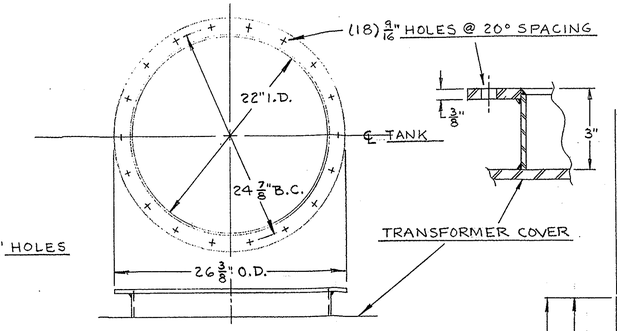

HIGH VOLTAGE ISOLATED PHASE BUS DUCT DRILLING

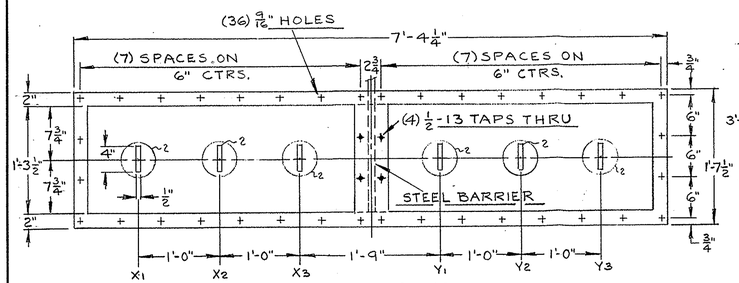

LOW VOLTAGE THROAT DRILLING

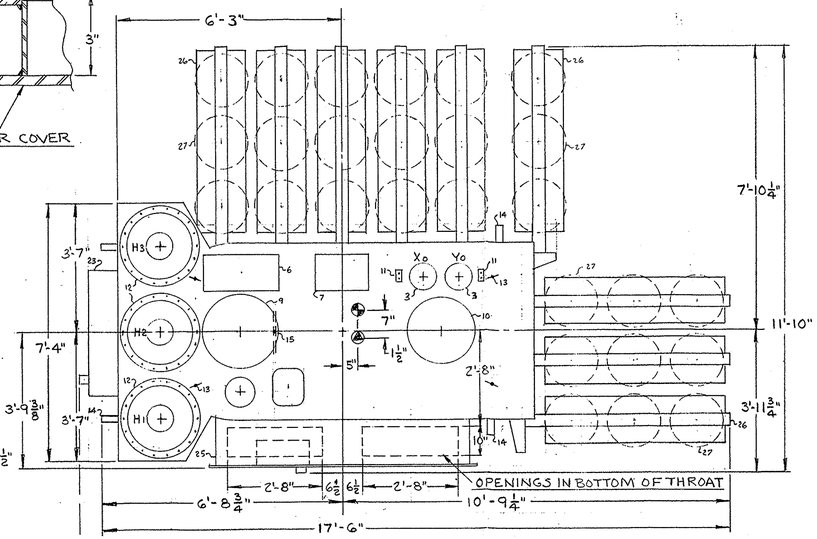

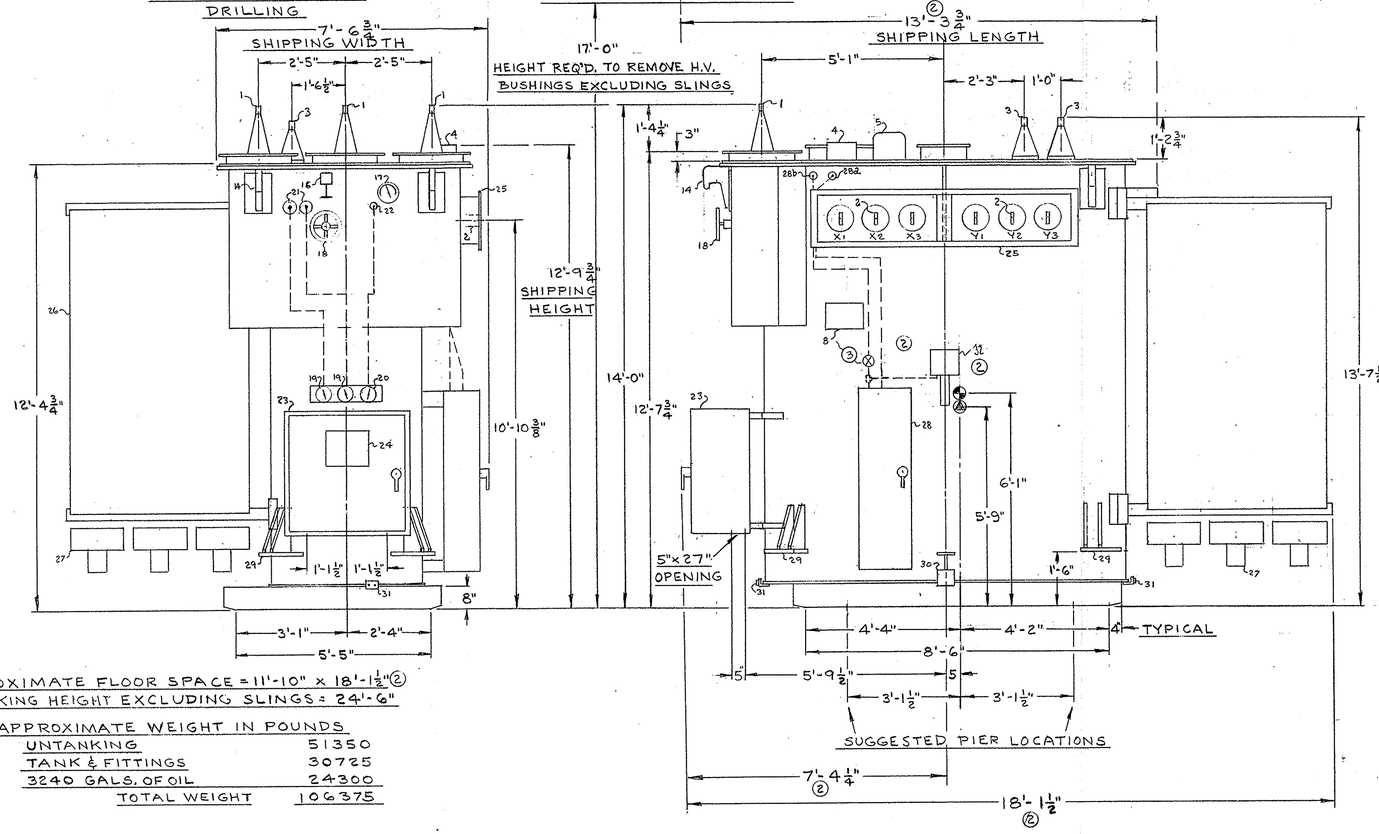

APPROXIMATE FLOOR SPACE = 11'-10" x 18'-1 1/2" ②
UNTANKING HEIGHT EXCLUDING SLINGS = 24'-6"

APPROXIMATE WEIGHT IN POUNDS

UNTANKING	51350
TANK & FITTINGS	30725
3240 GALS. OF OIL	24300
TOTAL WEIGHT	106375

LEGEND

* 1.- H.V. BUSHINGS (3) OHIO BRASS 25 KV.-1200 AMP CAT. 225226-5580
* 2.- L.V. BUSHINGS (6) OHIO BRASS 15 KV.- 2000 AMP CAT. 048410-5500
* 3.- L.V.N. BUSHINGS (2) OHIO BRASS 15 KV.- 1200 AMP CAT. 048450-5500
4.- RELIEF VENT OUTDOOR (RECLOSING TYPE) WITH ALARM & SEMAPHORE.
5.- WESTINGHOUSE SUDDEN PRESSURE RELAY.
6.- OUTLET BOX FOR H.V. BUSHING CURRENT TRANSFORMER LEADS.
7.- OUTLET BOX FOR L.V.N. BUSHING CURRENT TRANSFORMER LEADS.
8.- OUTLET BOX FOR L.V. BUSHING CURRENT TRANSFORMER LEADS.
9.- MANHOLE 21" I.D.
10.- MANHOLE 18" I.D.
11.- GROUND PADS (2) FOR L.V.N. BUSHINGS.
12.- H.V. BUS DUCT FLANGES. (SEE DETAIL).
13.- LIFTING EYES (4) FOR COVER ONLY.
14.- LIFTING HOOKS (4) FOR LIFTING COMPLETE UNIT.
15.- CORE GROUND 1/2-13 TAPPED HOLE IN COVER BRACE.
16.- 1" TOP FILTER VALVE BAFFLED & PLUGGED.
17.- MAGNETIC LIQUID LEVEL GAGE WITH ALARM CONTACTS.
18.- TAP CHANGER OPERATING WHEEL. (DENERGIZED OPERATION).
19.- WINDING TEMPERATURE RELAY (2) & INDICATOR WITH ALARM CONTACTS.
20.- LIQUID TEMPERATURE GAGE WITH ALARM CONTACTS.
21.- WINDING TEMPERATURE CONTROL WELLS. (2)
22.- LIQUID TEMPERATURE CONTROL WELL.
23.- FAN CONTROL CABINET. (DOOR SWING 3'-5")
24.- DIAGRAM NAMEPLATE DWG. 4A-5011.
25.- L.V. THROAT (SEE DETAIL) FOR DUAL L.V. WITH METAL BARRIER BETWEEN.
26.- RADIATORS (9) REMOVABLE WITH VALVES, VENTS AND DRAINS.
27.- COOLING FANS (27) 1/8 H.P. - 115 VOLT - 1 PHASE - 60 HERTZ CONTROLLED BY WINDING TEMPERATURE.
28.- INERT GAS EQUIPMENT CABINET. (DOOR SWING 1'-5 1/2")
28a - GAS INLET CONNECTION.
28b - GAS OUTLET CONNECTION.
29.- JACK LUGS (4) WITH PULLING EYES FOR PULLING TRANSFORMER IN ANY DIRECTION.
30.- 2" DRAIN VALVE WITH SAMPLER & PLUGGED, COMPLETE DRAIN.
31.- GROUNDING PADS (2) FOR TANK.
② 32.- WESTINGHOUSE COMBUSTIBLE LIMIT RELAY ASSEMBLY MODEL "CLR" 115 VOLT.
33.- ISOLATING VALVE.

NOTES

1.- OPERATING PRESSURE 3/4 TO 8 P.S.I. POSITIVE.
2.- LIQUID LEVEL CHANGES .940" PER 10°C. CHANGE IN LIQUID TEMPERATURE.
3.- DISTANCE FROM HIGHEST POINT OF MANHOLE FLANGE SURFACE TO 25°C. LIQUID LEVEL 11 1/4".
4.- 2185 GALLONS OF OIL REQUIRED TO COVER CORE & COILS WITH RADIATOR VALVES OPEN.
5.- OIL RETAINING GASKETS IN METAL TO METAL STOPS.
6.- BASE SUITABLE FOR ROLLING OR SKIDDING IN ANY DIRECTION.
7.- SHIP NITROGEN FILLED. SHIPPING WEIGHT = 67575 LBS.
8.- TANK IS DESIGNED TO WITHSTAND FULL VACUUM.
9. MAIN COVER IS WELDED TO TOP RIM OF TANK.
10. ⊕ DENOTES CENTER OF GRAVITY COMPLETE UNIT.
11. ⊕ DENOTES CENTER OF GRAVITY AS SHIPPED.
12. ALL EXTERIOR WIRING TO BE WATERTITE OKOPRENE TYPE-"RR" EXCEPT FOR C.T. IN CONDUIT.
13. REMOVE ITEMS-1-3-5-26-27 & OIL FOR SHIPPING.
* 14. INTERNAL LEAD TERMINALS: (H.V. 400 MCM BARE COPPER) L.V. (2) 300 MCM BARE CABLE - BRAZED TO COPPER LUG - (L.V.N. (1) 400 MCM EA. BARE CABLE BRAZED TO COPPER LUG.)

BUSHING CURRENT TRANSFORMERS

LOCATION	H1H2H3	H1H2H3	X0	Y0	X2	Y2
RATIO	1200:5	30000:5	1200:5	1200:5	WINDING	WINDING
ACC. CLASS	C400	C800	C400	C400	TEMP.	TEMP.
QUANTITY	2	1	2	2	1	1
FURN. OR PROV.	FURN.	FURN.	FURN.	FURN.	FURN.	FURN.

REFERENCE DRAWINGS		BUSHING TERMINALS
WIRING DIAGRAM	4E5854	H.V. - 1 1/2"-12-2 1/8" USABLE - L.V. - 2" 12.
SHIPPING	4B5857	3" USABLE - L.V.N. - 1 1/2"-12-2 3/4" USABLE

24000/26880 K.V.A. CONTINUOUS SELF-COOLED 3PH. 60HZ.
32000/35840 K.V.A. CONTINUOUS FORCED AIR COOLED
40000/44800 K.V.A. CONTINUOUS FORCED AIR COOLED
65°C. RISE BY RESISTANCE 80°C. HOT SPOT RISE
H.V. 25000 TAPS: 26250/25625/24375/23750 B.I.L. 150
L.V. 7200Y/4160 - 50% RATED K.V.A. B.I.L. 95
T.V. 7200Y/4160 - 50% RATED K.V.A. B.I.L. 95
CUSTOMER: VIRGINIA ELECTRIC POWER CO. (BROWN & ROOT-AGENT)
S.O. 260531 DES. W0730 C.O. 35-1163-101 TANK 50-120-140

② REV. #2 - ADDED ITEMS 32 & 33 AND INCREASED OVERALL DIM. DUE TO FAN CONTROL CABINET SIZE CHANGE. - 10/19/72 - G.L.S.
REV. #3 - OUTLET BOX ON WALL CHANGED & CLR HOOKUP CHANGED TO OUTLET LINE ONLY - 1/12/73 - GL.S.

3206

REV. #1 - ADDED FAN VOLTAGE - CHANGED TO 1Ø - 9/27/72 - GLS

DRN. G.L.S.	CHK. G.L.S.	APP'D. D.L.W.	SCALE ~	DATE 8-3-72

TRANSFORMER OUTLINE

MOLONEY ELECTRIC CO.
ST. LOUIS, MO., U.S.A.

DWG. NO. 4D5855 REV. # 3