LINE	ITEM 12 PART NO	ITEM 13 PART NO	ITEM 19 PART NO	GASKET MATERIAL	M
01	089-73849-12	089-70826-13	089-72958-24	GARLOCK 900	M

PARTS LIST

ITEM	PART NO	QTY	DESCRIPTION
1	075-78701-JA	1	VALVE, BALL, 4", FLANGED, CS W/SS TRIM W/ STREAM JKT JAMESBURY, 4", AZFRC-22HB-TTSJ/ SW927
2	063-71092	8	NUT, HEAVY HEX, 3/4-10 UNC-2B, A194-2H
3	040-73401-LT	1	SEALANT, THREADLOCKING, RED No 271
4	064-73322	1	SEAL, SURE LOCK, 3/8" WIDE X 8 1/2" LG
5	063-70910	4	BOLT, HEX HD, 5/8"-11 UNC-2A X 1 3/4" LG, A193-B7
6	063-71220	4	WASHER, SPRING LOCK, REG, .0636" ID X 1.079" OD X 0.203" THK
7	B-28594	1	EXTENSION ASSEMBLY, VALVE HANDLE, BOTTOM OUTLET
8	B-22501	1	BOTTOM VALVE ADAPTOR ASSEMBLY
9	063-78873	8	STUD, TBE, 3/4"-10 UNC X 3 3/8" LG, A193-B7
10	063-70787	8	WASHER, SPRING LOCK, XTR DUTY, 0.763" ID X 1.361" OD X 0.241" THK
11	B-28650	1	CAP & PLUG ASSEMBLY, 4" MI OR DI CAP W/3" NPT PLUG
12	SEE LINE CHART	1	GASKET, 5" ID X 8 3/8" OD X 1/8" THK
13	SEE LINE CHART	1	GASKET, 7 1/2" ID X 8 1/2" OD X 1/8" THK
14	B-28630-01	1	BRACKET ASSEMBLY, SUPPORT, VALVE HANDLE
15	063-73740	1	PIN ASSEMBLY, LOCKING, 3/8" DIA (A-17312)
16	A-113045	1	SUPPORT BRACKET, VALVE HANDLE, SKID
17	057-72790	1	PIN, COTTER, 1/4" DIA X 3"
18	B-122034	2	PIPE BEND, 90°, 2" SCH 80 TOE
19	SEE LINE CHART	1	GASKET, 3 1/4" ID X 5 1/4" OD X 1/8" THK

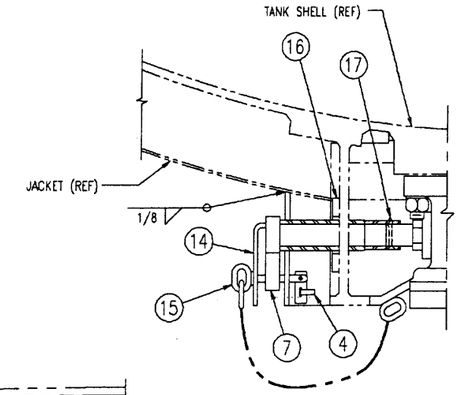

VIEW C-C

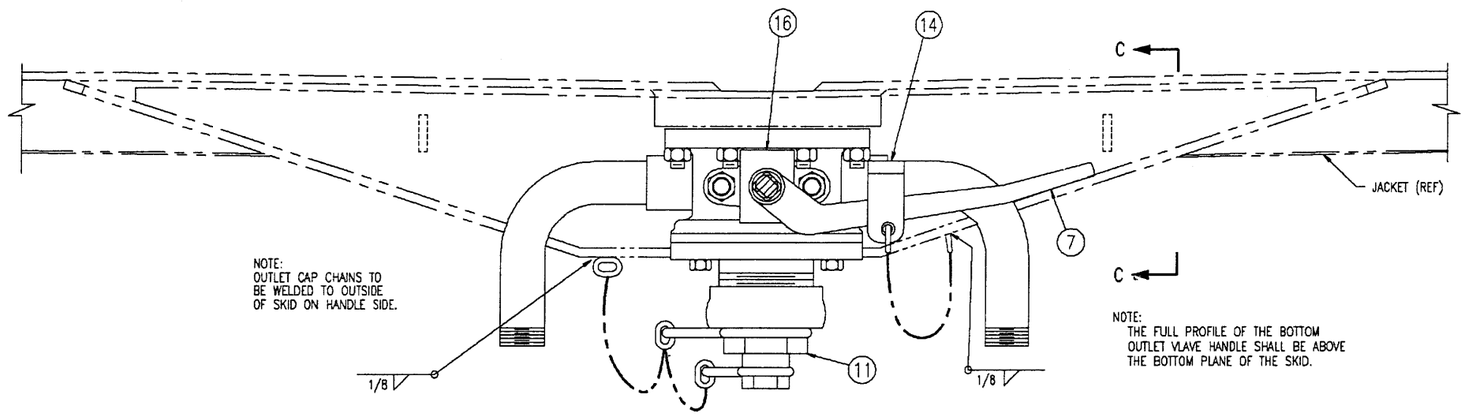

VIEW B-B

NOTE "A"
APPLY THREAD SEALANT TO THREADS BEFORE INSTALLATION

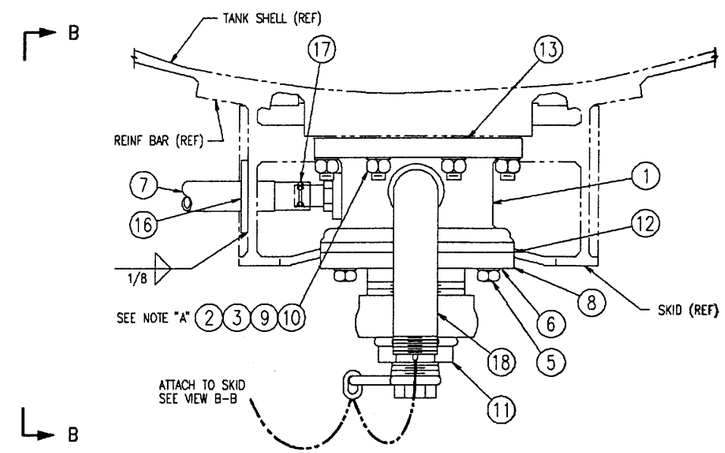

VIEW A-A

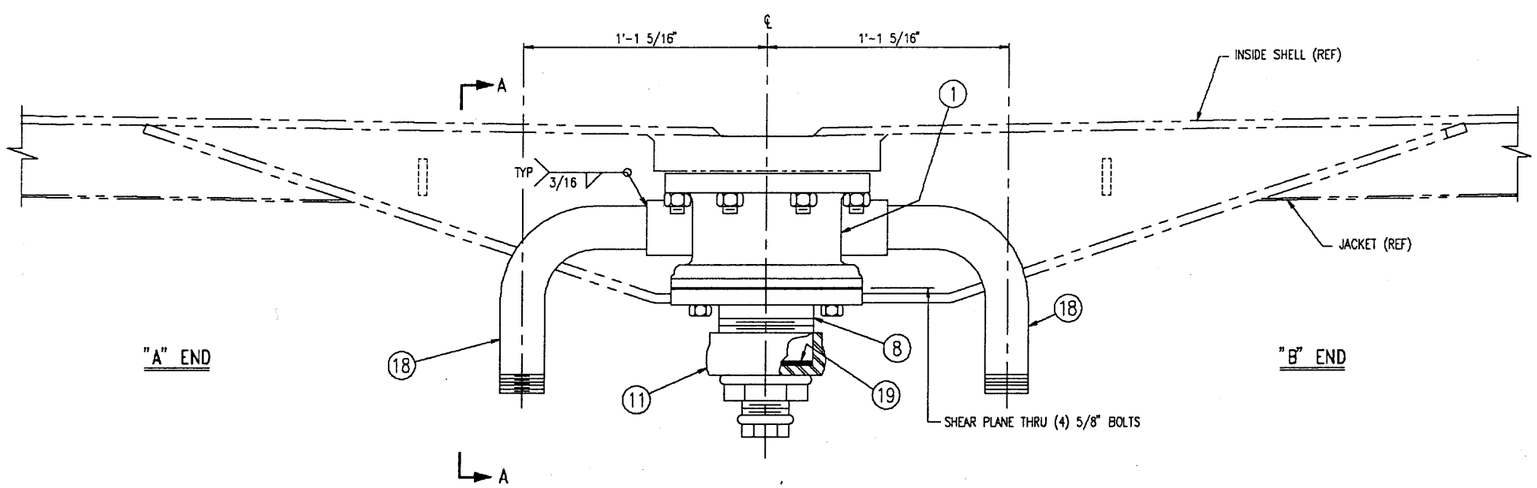

"A" END

"B" END

NOTES:

1. FASTENERS MUST MEET ALL REQUIREMENTS OF THE SPECIFICATION AND MUST BE PROPERLY MARKED WITH MATERIAL GRADE AND THE MANUFACTURERS REGISTERED SYMBOL. MUST COMPLY WITH PUBLIC LAW 101-592.
2. FEMALE COMPONENT OF THREADED FASTENERS MUST BE FULLY ENGAGED AND NO THREADS MAY BE VISIBLE IN THE FEMALE PART. NYLON INSERT ON LOCKNUTS MUST BE FULLY PENETRATED BY THE MALE THREADED PART.

REV	BY	DATE	REVISION	M
B	KFC	11-28-95	ADDED NOTE 2 REV DESCRIPTION OF ITEM 11	
A	KFC	11-12-93	ITEM 9 WAS 063-70986 TFL STUD	M

A.A.R. APPLICATION NO.

FILE:

TRINITY INDUSTRIES, INC.
RAILCAR DIVISION

THIS DRAWING CONTAINS CONFIDENTIAL AND PROPRIETARY INFORMATION OF TRINITY INDUSTRIES, INC. THE DRAWING IS THE PROPERTY OF TRINITY INDUSTRIES, INC. AND IS LOANED FOR ENGINEERING REVIEW ONLY. THE DRAWINGS MAY NOT BE COPIED OR USED FOR ANY OTHER PURPOSE WITHOUT THE WRITTEN CONSENT OF TRINITY INDUSTRIES, INC. AND SHALL BE RETURNED ALONG WITH ALL COPIES UPON DEMAND. © TRINITY INDUSTRIES, INC. 1995

DRAWN	ORH	8-12-93
CHKD	KFC	8-18-93
APPD	MSR	8-18-93
1st FILE	9365A	
NLA		
WEIGHT		
1215-0665-000		

BOTTOM OUTLET ARRANGEMENT

JAMESBURY 4" AZFRC-22HB-TTSJ/ SW927
STEAM JACKETED, TFE SEATS & SEALS

DRAWING NO:	SHEET	REV	SIZE
D-45769	1 OF 1	B	D